Architectural Door Accessories

ASSA ABLOY

Rockwood 555 Extension Flush Bolt

The global leader in door opening solutions

NOT TO SCALE

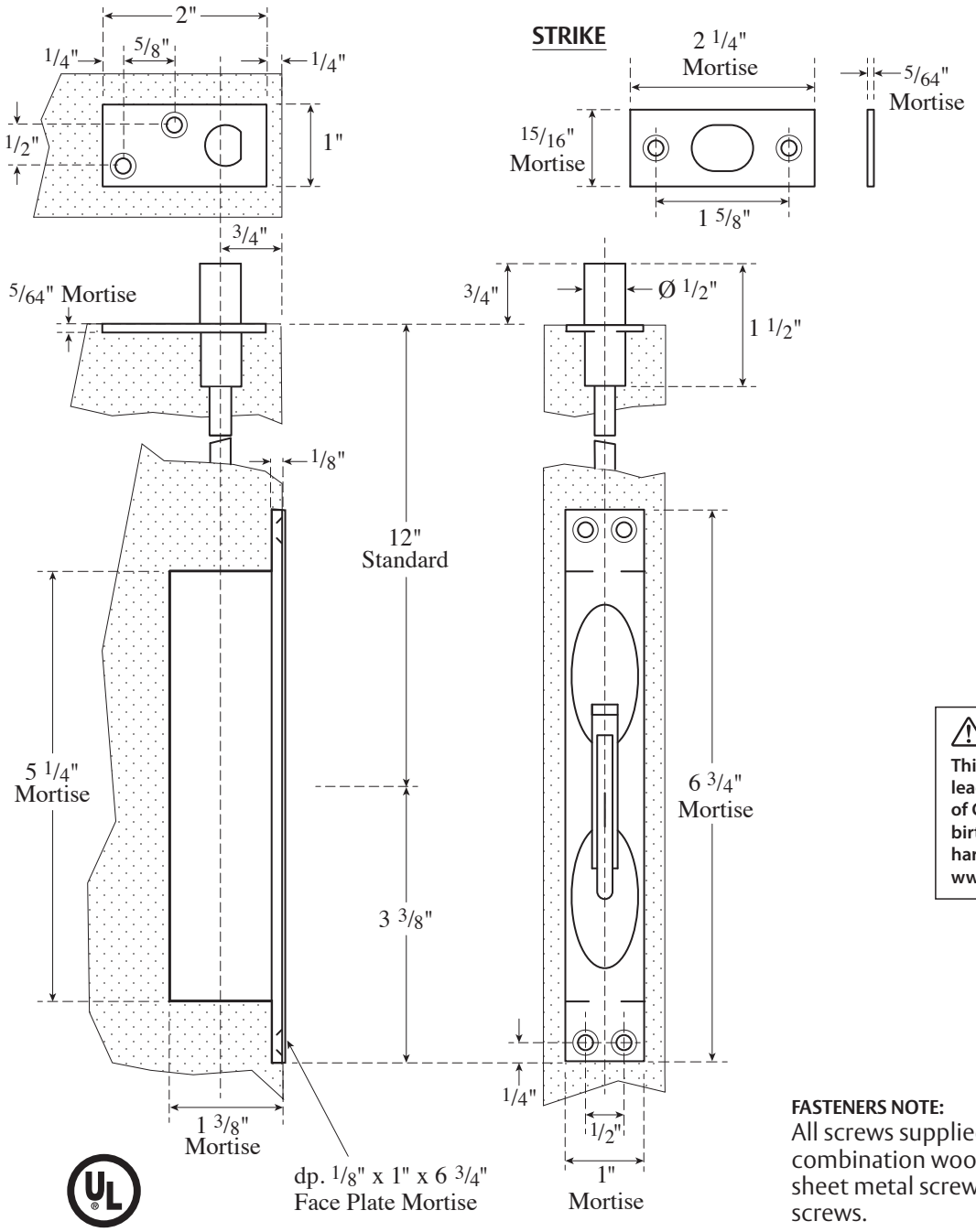

FASTENERS NOTE:
All screws supplied are #8 combination wood screws, sheet metal screws, machine screws.

Template T-555

Effective date: Sept. 9, 2018
Supercedes: All Previous

NOTE: ASSA ABLOY reserves the right to make product changes and is not responsible for obsolete template errors. To ensure your template is current, please visit our website at www.assaabloydooraccessories.us or call us at 800-458-2424

⚠ WARNING
This product can expose you to lead which is known to the state of California to cause cancer and birth defects or other reproductive harm. For more information go to www.P65warnings.ca.gov.

300 Main Street
Rockwood, Pennsylvania 15557
P: 800.458.2424 • F: 800.922.9212
www.assaabloydooraccessories.us • orders.rockwood@assaabloy.com

Copyright © 2018, ASSA ABLOY Accessories and Door Controls Group, Inc. All rights reserved. Reproduction in whole or in part without the express written permission of ASSA ABLOY Accessories and Door Controls Group, Inc. is prohibited.